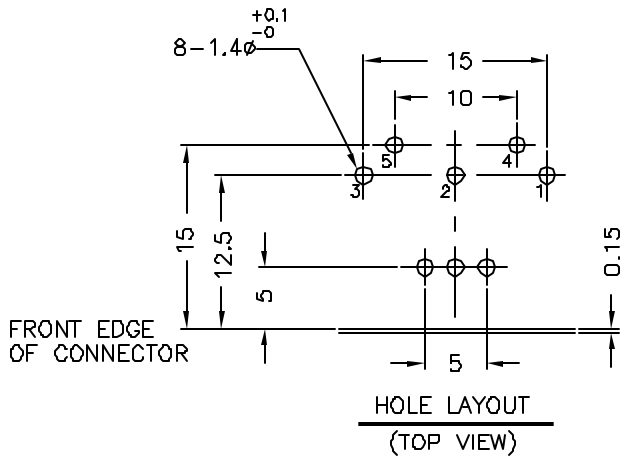

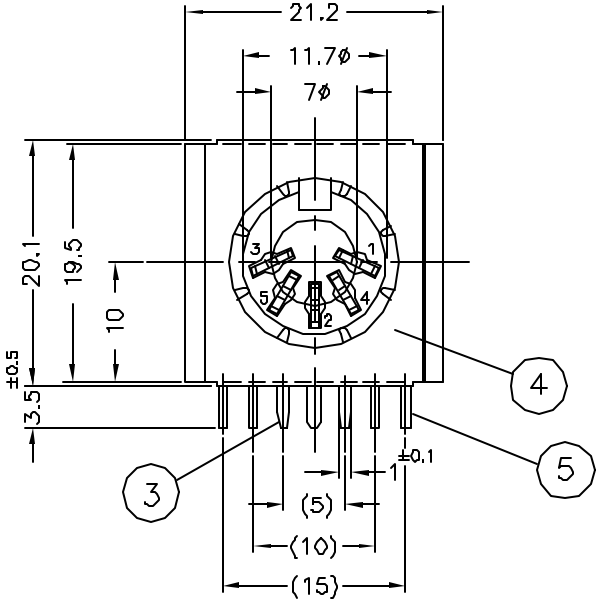

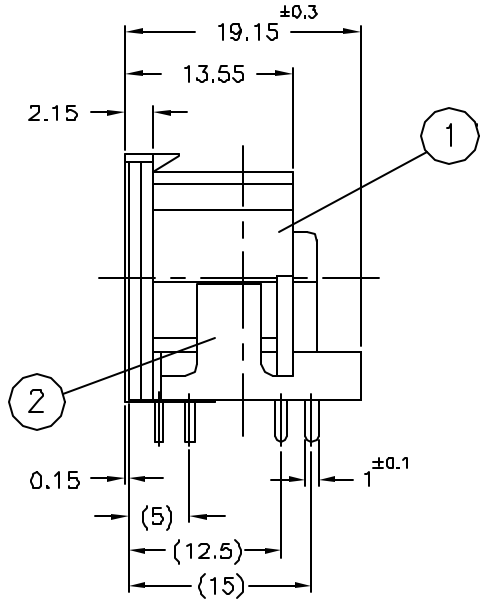

SPECIFICATIONS:

1. CURRENT CARRYING CAPACITY:
   1) AC: 100V 1A MAX.
   2) DC: 24V 2A MAX.
2. CONTACT RESISTANCE:
   1) INITIAL, BEFORE LIFE CYCLE TEST.
      PIN TO CONTACTOR: 20mΩ MAX.
      PLUG SHIELD TO CONNECTOR: 100mΩ MAX.
   2) AFTER LIFE CYCLE TEST.
      PIN TO CONTACTOR: 100mΩ MAX.
      PLUG SHIELD TO CONNECTOR: 150mΩ MAX.
3. INSULATION RESISTANCE:
   BETWEEN ANY ADJACENT OPEN CONTACTS SHALL NOT BE LESS THAN 100MΩ AS SPECIFIED BELOW WITH AT 500V DC INSULATION RESISTANCE TEST.
4. DIELECTRIC STRENGTH:
   A POTENTIAL OF 500V AC RMS. 50/60HZ SHALL BE APPLIED BETWEEN ANY OPEN CONTACTS FOR ONE MINUTE WITHOUT BREAKDOWN.
5. INSERTION FORCE: 5.0Kg MAX.
6. WITHDRAWAL FORCE: 1.0Kg MIN.
7. LIFE CYCLE TEST:
   CONNECTOR SHALL BE SUBJECT TO 5,000 CYCLES AT 10 TO 20 CYCLES PER MINUTE WITH NO ELECTRICAL LOAD.
8. UNLESS OTHERWISE SPECIFIED TOLERANCE ARE: ±0.2mm

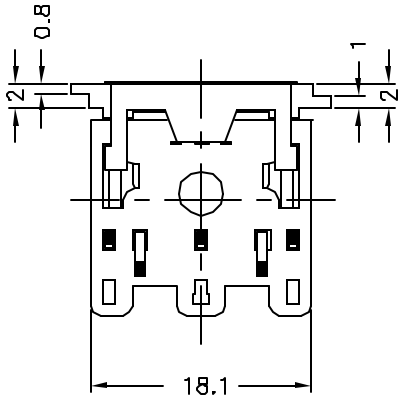

LTR	PART NAME	QTY	MATERIAL & SPEC
5	CONTACT TERMINAL	5	BRASS 0.7t TIN ALLOY PLATING
4	SHIELDING PLATE	1	PHOSPHOR BRONZE 0.15t TIN ALLOY PLATING
3	EARTH TERMINAL	1	TI-CU COPPER ALLOY 0.2t TIN ALLOY PLATING
2	COVER	1	PBT UL 94V-0 BLACK COVER
1	BODY	1	PBT UL 94V-0 BLACK COVER

Singatron Enterprise Co., Ltd.
信音企業股份有限公司

TITLE	5P 180° DIN CONNECTOR (WITH SHIELD)		
DWN	CHEN 3/5-'99	UNIT: MM	CAD NO. DJ65PSB
CHKD	SHUN 3/5-'99	SCALE: 2/1	DWG NO.
APPVD	FRANK 3/6-'99	SIZE: B4	NEW NO. 2DJ-0065PSB2

REV : B

OLD NO. DJ-006-5PS-(B)